REPLACING ARMATURES WITHOUT BRAKE WASHERS

WARNING!!! ALWAYS USE PROPER EYE PROTECTION WHEN PERFORMING ANY MECHANICAL REPAIRS TO A VEHICLE – INCLUDING, BUT NOT LIMITED TO, ANY INSTALLATION AND OR REPAIRS TO THE DELCO REMY STARTING MOTORS. FAILURE TO USE PROPER EYE PROTECTION CAN LEAD TO SERIOUS AND PERMANENT EYE DAMAGE.

Only perform the mechanical functions that you are properly qualified to perform. Mechanical repairs that are beyond your technical capabilities should be handled by a professional installation specialist.

FOLLOW ENGINE AND/OR VEHICLE MANUFACTURER'S INSTRUCTIONS CAREFULLY WHEN REMOVING AND INSTALLING THE STARTER.

This package includes an armature and a brake washer. When using this package to replace an armature with a molded-in spacer instead of a brake washer (see illustration), be sure to use both the new armature and new brake washer. The brake washer replaces the molded-in spacer and must be included to insure proper performance of the starting motor.

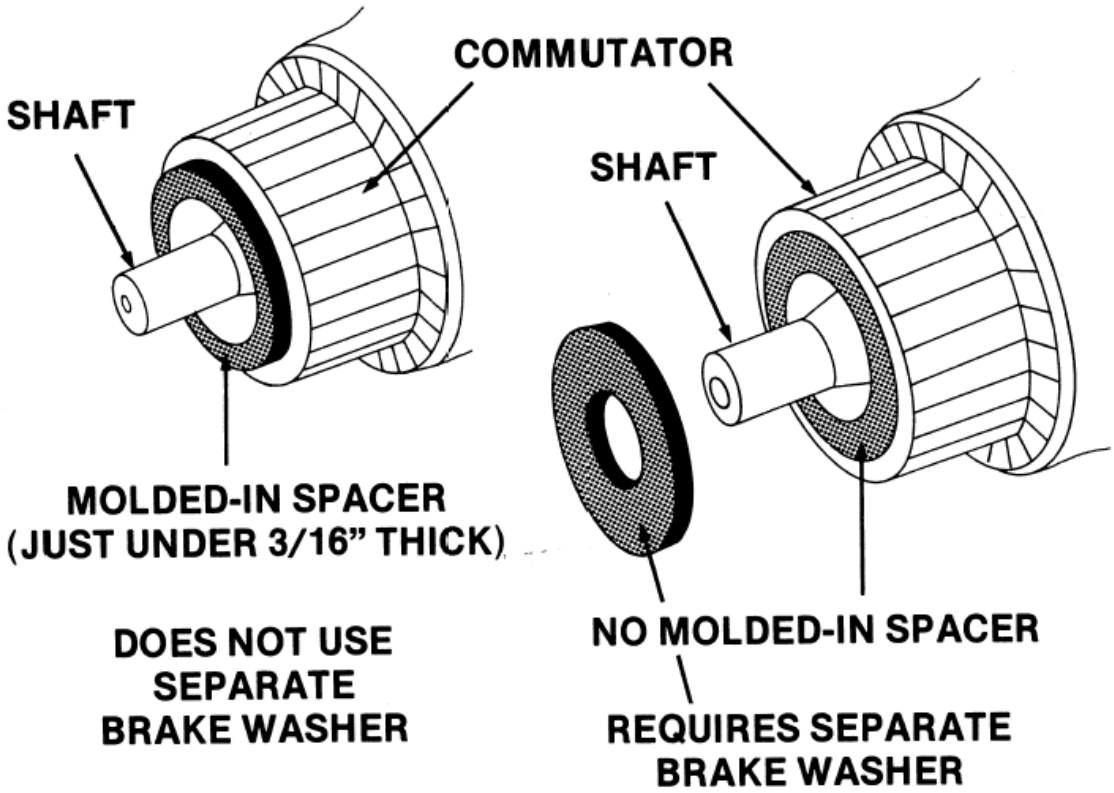

Technical support: USA 800 854 0076, Mexico 01 800 000 7378, Brazil 0800 703 3526, South America 55 11 2106 6510 or visit delcoremy.com

NOTICE - Only licensed Remy International, Inc. product and component parts should be used, and the use of other parts or modifications not approved by Remy International, Inc. will void all applicable warranties. The failure to carefully follow these Installation Instructions, set forth above, will void all applicable warranties. DELCO REMY is a registered trademark of General Motors Corporation, licensed to Remy International, Inc. Pendleton, IN 46064.

© 2012 Remy International, Inc. All rights reserved