Instruction Sheet
10511623
19JL13 C/P30502 REV2

REPLACING 21SI & 22SI VOLTAGE REGULATOR

WARNING!!! ALWAYS USE PROPER EYE PROTECTION WHEN PERFORMING ANY MECHANICAL REPAIRS TO A VEHICLE – INCLUDING, BUT NOT LIMITED TO, ANY INSTALLATION AND OR REPAIRS TO THE DELCO REMY ALTERNATOR. FAILURE TO USE PROPER EYE PROTECTION CAN LEAD TO SERIOUS AND PERMANENT EYE DAMAGE.

Only perform the mechanical functions that you are properly qualified to perform. Mechanical repairs that are beyond your technical capabilities should be handled by a professional installation specialist.

DANGER!!! To avoid injury or damage, always disconnect the negative cable at the battery before removing or replacing the alternator. The alternator output terminal is always live ("hot"). If the battery is not disconnected, a tool accidentally touching this terminal and ground can quickly get hot enough to cause skin burn or damage to the tool and surrounding parts.

The voltage regulator in this package replaces some regulators that have a threaded terminal stud, along with an extra connector from this stud to the brush clip at the brush holder mounting hole. The new regulator has internal circuitry that eliminates the need for this extra connection.

Refer to illustration. If the old regulator (1) has a threaded stud (2) and connector (3) as shown, install new regulator without stud and omit the connector (3) and nut (4). Assemble the diode trio connector (5) back to the mounting hole (6) with the insulated screw (7).

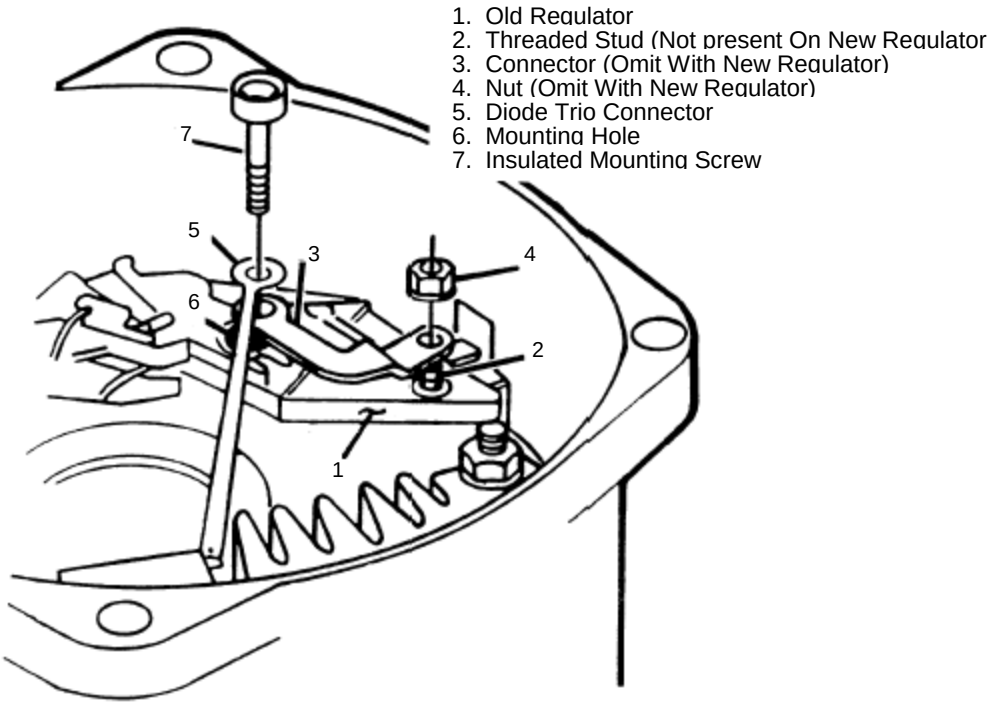

Technical support: USA 800 854 0076, Mexico 01 800 000 7378, Brazil 0800 703 3526, South America 55 11 2106 6510 or visit delcoremy.com

NOTICE - Only licensed Remy International, Inc. product and component parts should be used, and the use of other parts or modifications not approved by Remy International, Inc. will void all applicable warranties. The failure to carefully follow these Installation Instructions, set forth above, will void all applicable warranties. DELCO REMY is a registered trademark of General Motors Corporation, licensed to Remy International, Inc. Pendleton, IN 46064.

© 2012 Remy International, Inc. All rights reserved